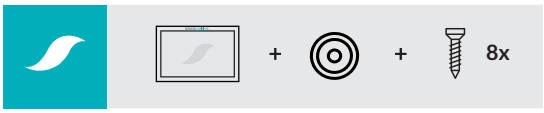
+
+
8x

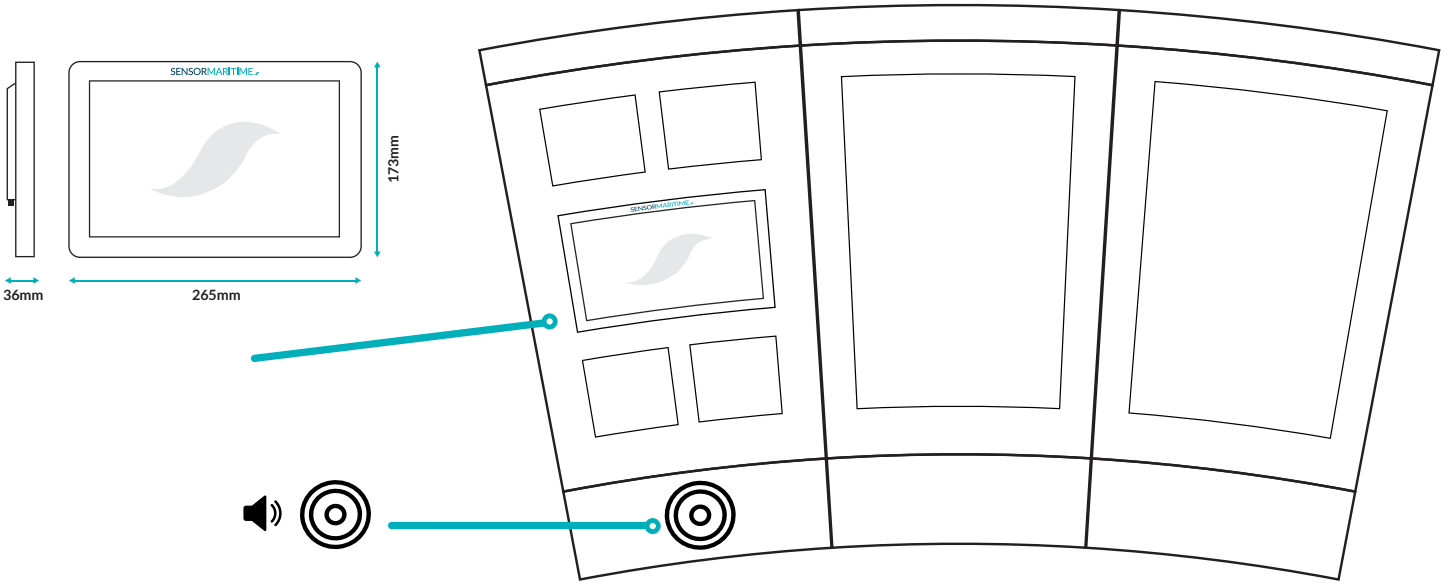
SENSORMARITIME
173mm
36mm
265mm

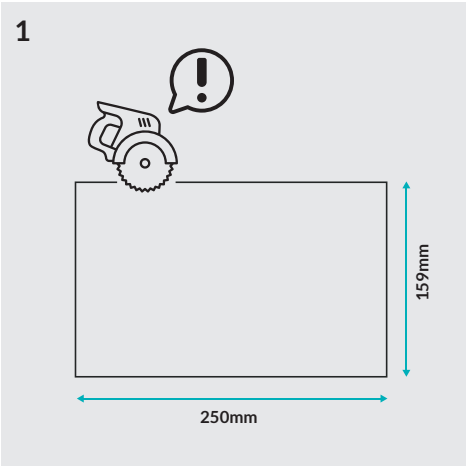
1
159mm
250mm

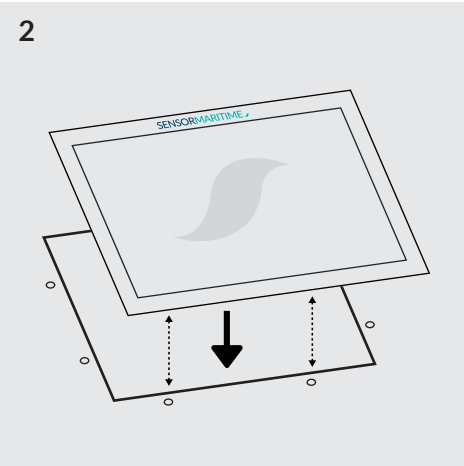
2
SENSORMARITIME

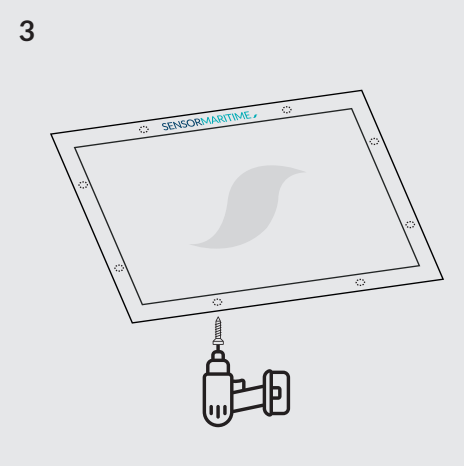
3
SENSORMARITIME

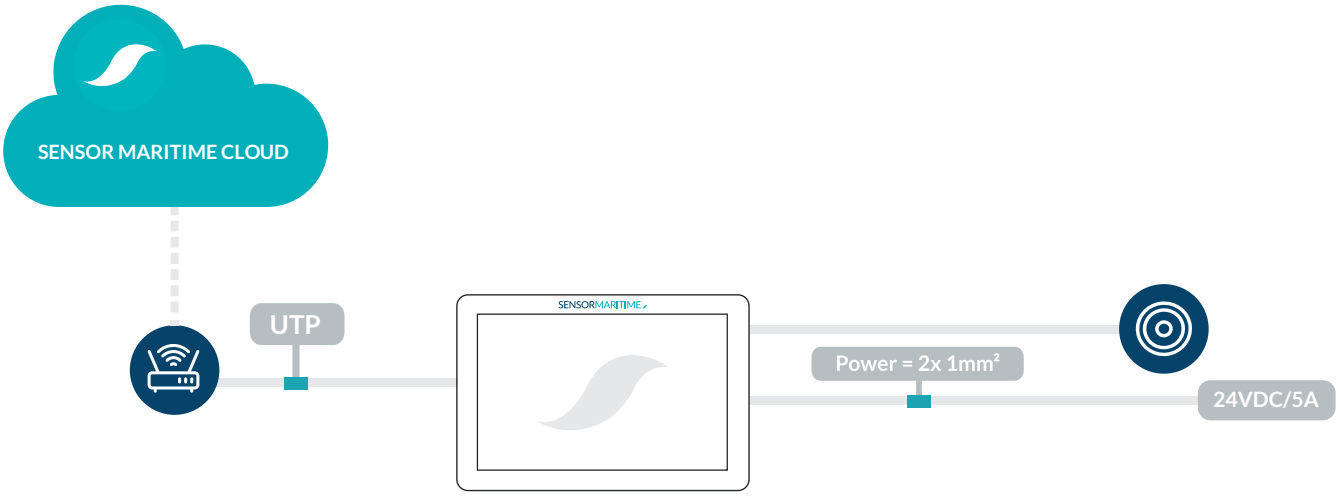
SENSOR MARITIME CLOUD
UTP
SENSORMARITIME
Power = 2x 1mm²
24VDC/5A

+
/
+
+
20m

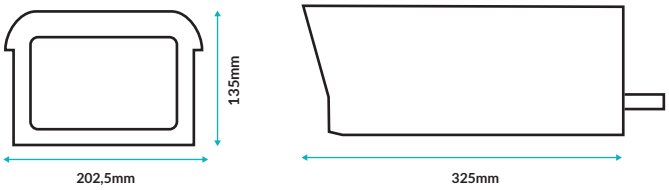
135mm
202,5mm
325mm

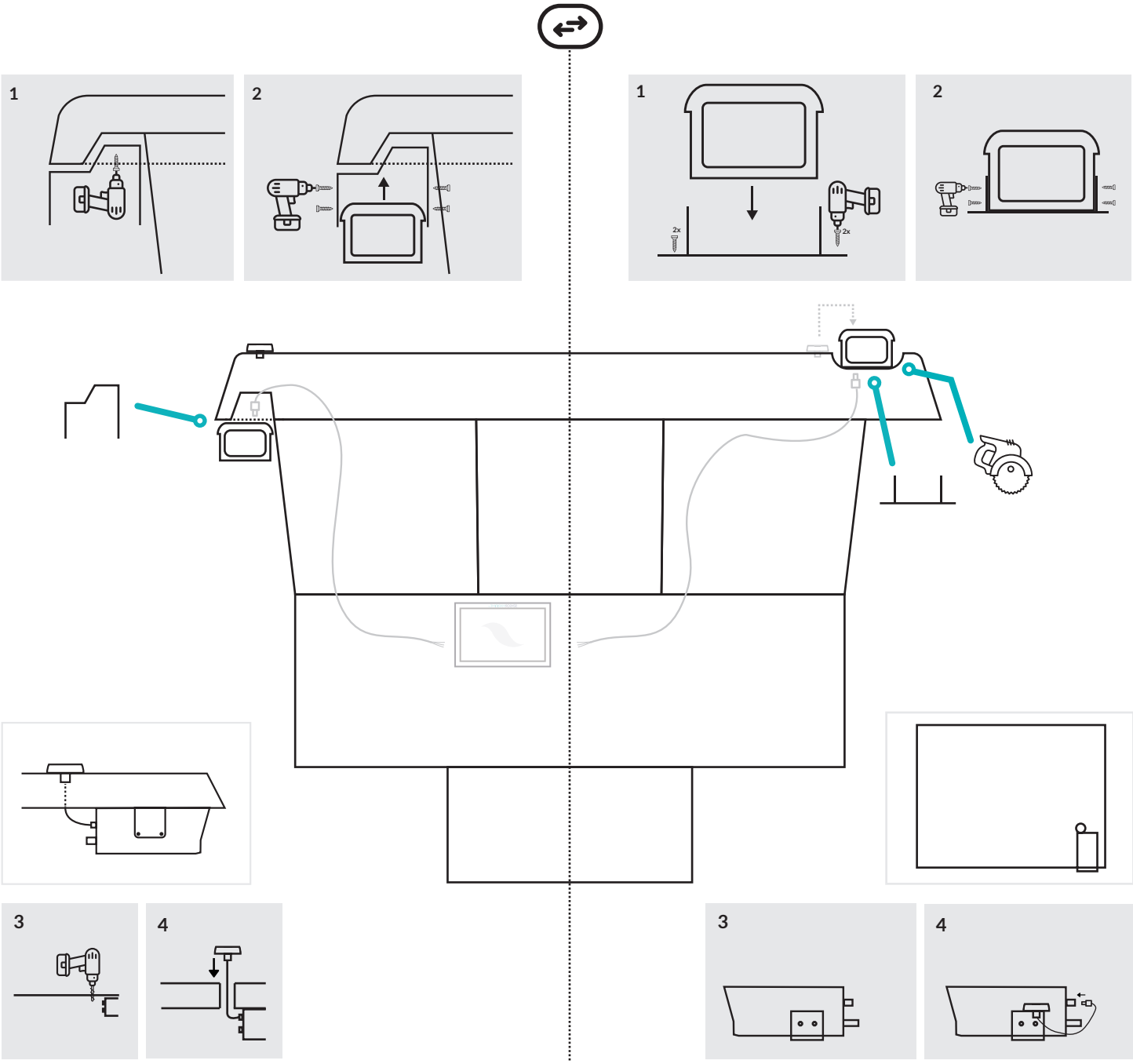
1
2
1
2
2x
2x
3
4
3
4

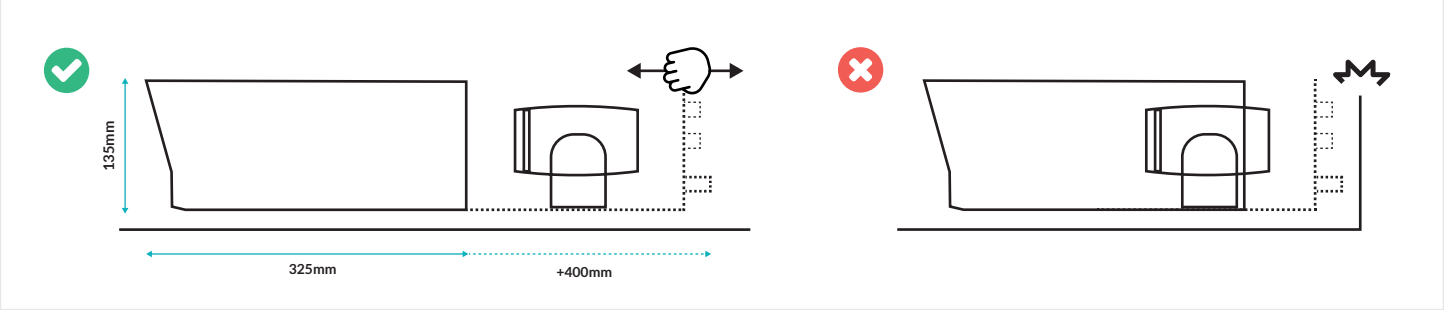
135mm
325mm
+400mm

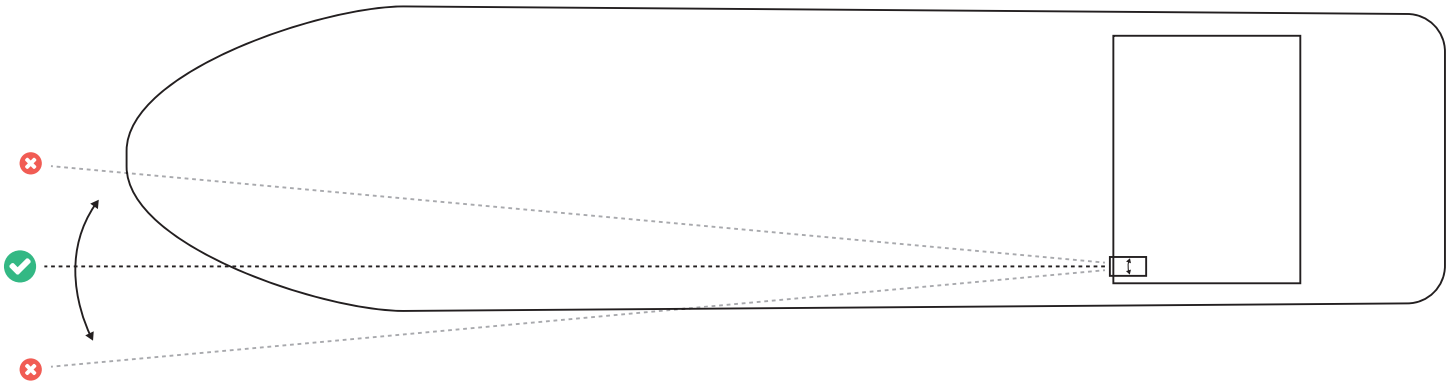

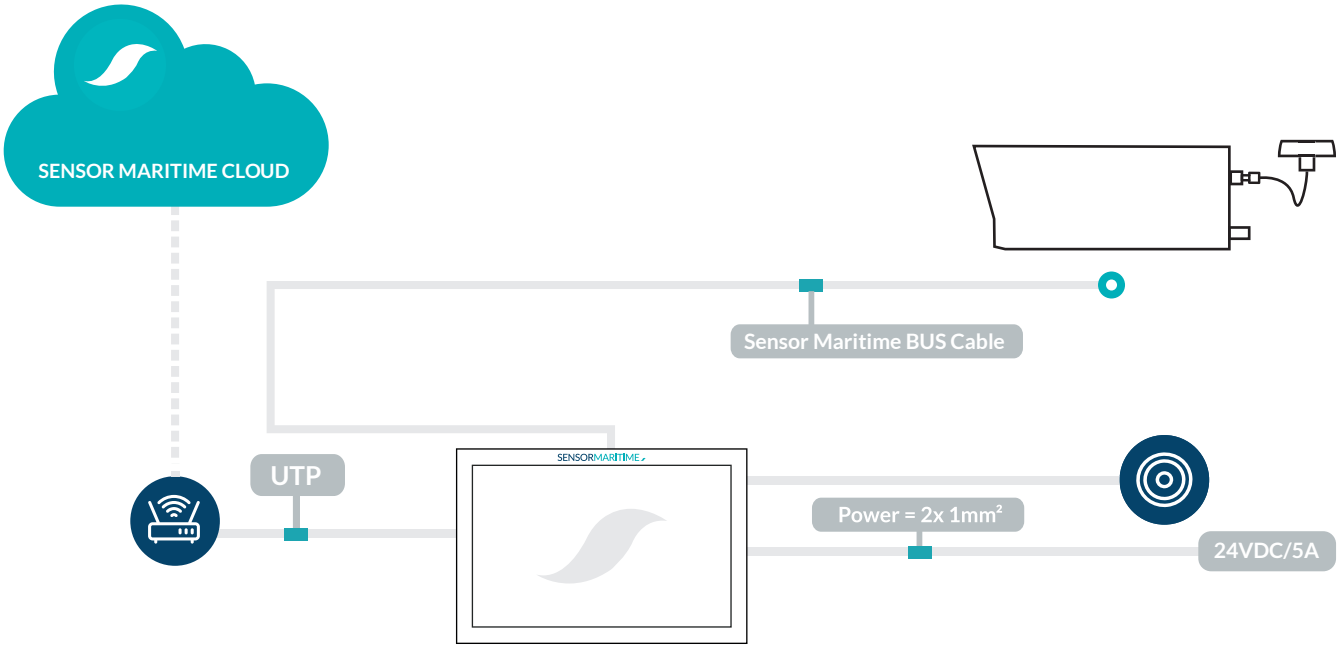
SENSOR MARITIME CLOUD
Sensor Maritime BUS Cable
UTP
SENSORMARITIME
Power = 2x 1mm²
24VDC/5A