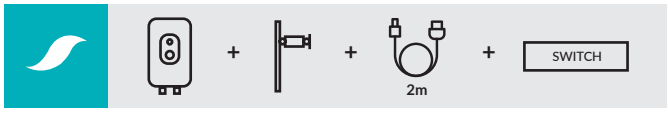
+
+
2m
+
SWITCH

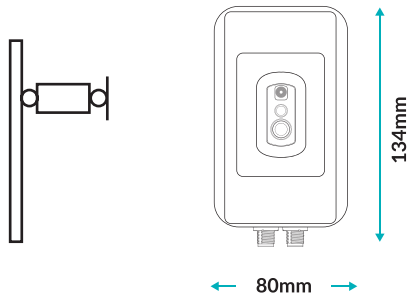
134mm
80mm

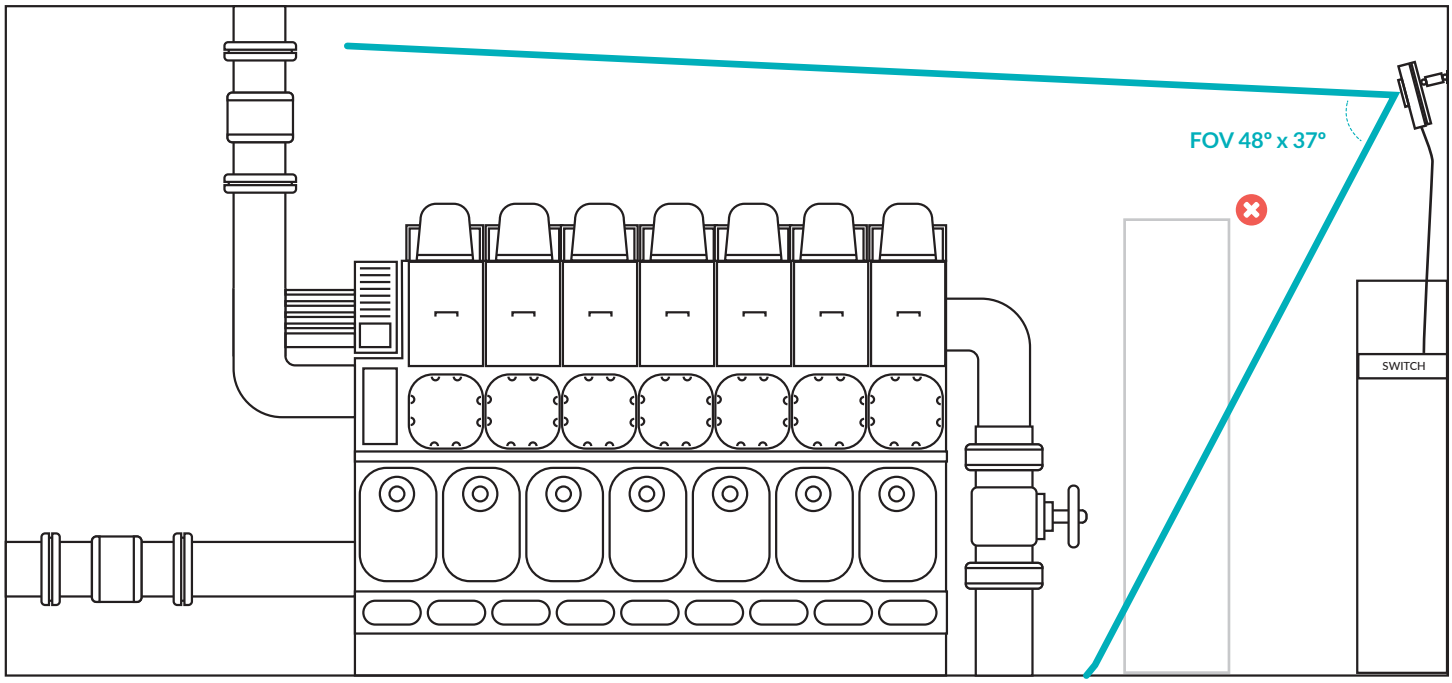
FOV 48° x 37°
SWITCH

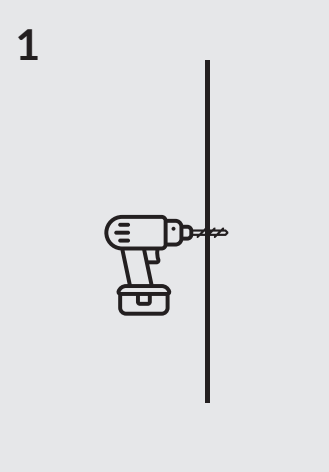
1

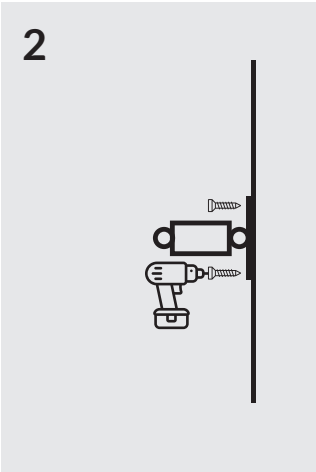
2

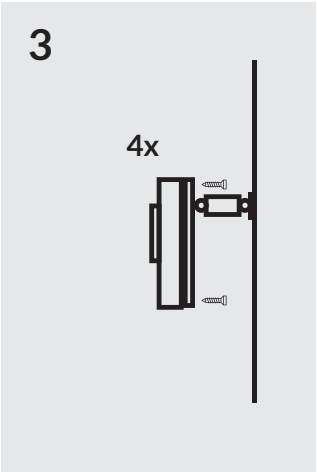
3
4x

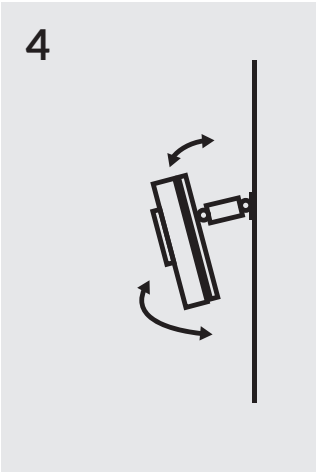
4

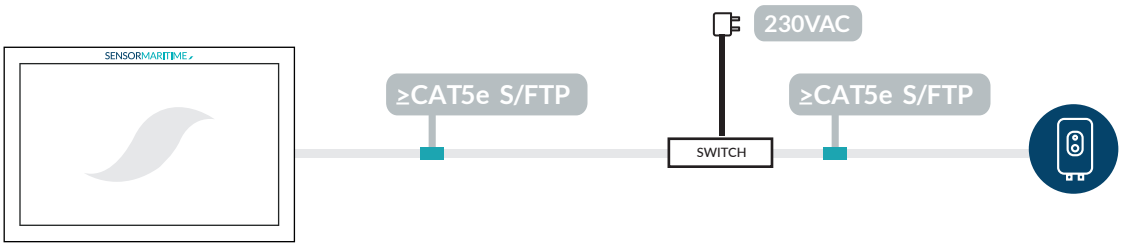
SENSORMARITIME
≥CAT5e S/FTP
230VAC
SWITCH
≥CAT5e S/FTP